Brushless DC Motor - 35 mm Ø

B35E24BZ000 128.5 Watts Peak Power

GMP
Global Motion Products

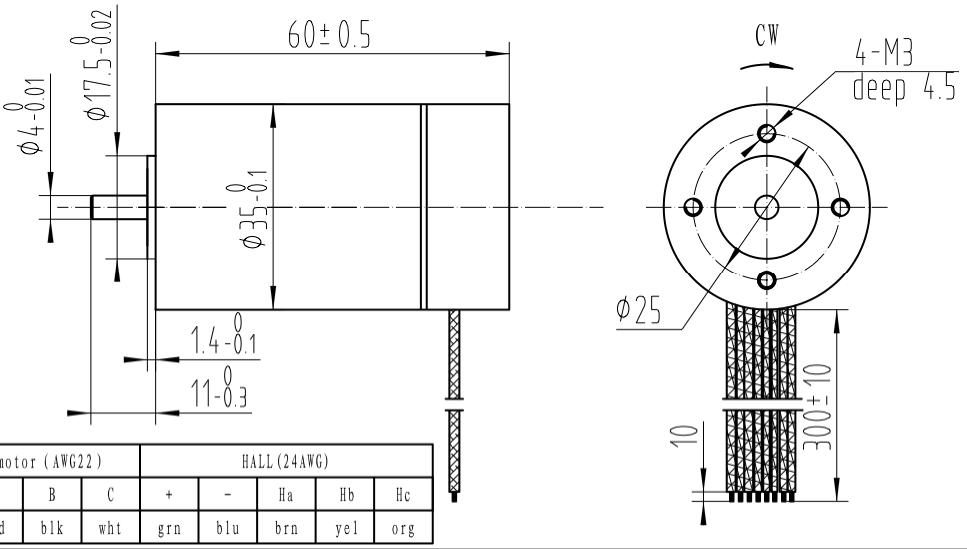

motor (AWG22)			HALL (24AWG)				
A	B	C	+	-	Ha	Hb	Hc
red	blk	wht	grn	blu	brn	yel	org

Dimensions in mm
Not to Scale

Nominal voltage	24.0 Volts
No-load speed	15,000 rpm
Stall torque	330.3 mNm
No-load current	0.200 Amps
Peak Output power	128.5 Watts
Torque constant	15.14 mNm/A
Terminal resistance	1.10 Ohms
Back-EMF constant	1.59 V/krpm
Winding inductance	0.130 mH
Slope of speed/torque curve	45.4 rpm/mNm
Maximum Efficiency	82 %
Motor Constant	14.43 mNm/Sqrt Watt
Commutation Type	Electronic - Hall Effect

Radial Load Rating	45.5 N	Radial Play	0.015 mm	Max Temperature	85 °C
Radial Load Distance	7 mm	Thrust Play	0.200 mm	Min Temperature	-35 °C
Axial Load	36.00 N	Magnet Type	NdFeB	Max Winding Temp	125 °C
Press Fit Force - Max		Bearing Type	Ball Bearings	Mass	220 grams

Gearbox Options	P35, P42, P52 Planetary Gearboxes
Encoder Options	Contact GMP
Options - Other	Windings, special shafts, sensorless version, lubrication, connectors.

Global Motion Products
Distributed by:
Precision Motion Distributors: (925) 803–9565
Technical Support: (760) 451-2723
http://www.gmpwebsite.com Email: info@gmpwebsite.com

RoHS Compliant

Specifications Subject to change without notice